Model 990 Can Crusher

- Manufactured in stainless steel and food approved plastics
- Capable throughput of 200-300 cans per hour
- Maximum can size 6.3 diameter x 10.3 inches high
- Compressed air required for simple operation
- Safety features are built into the machine rendering it inoperative should the lid be opened
- Easy cleaning

AVAILABLE OPTIONS

* Stand Alone Support Table
* Can Crusher Stand

DC NORRIS
NORTH AMERICA

The DCN Model 990 Can Crusher is a heavy duty table top machine capable of crushing the majority of domestic and industrial cans to approximately 20% of the original size.

The operation is as simple as opening the lid, dropping in the can, closing the lid and the can is crushed and ejected out of the exit chute. Taking just a few seconds to complete the action.

Savings can be achieved, by increasing space in your dumpster or recycling bins by as much as 80%!

- Customers also have an option to upgrade to a semi-automatic mid-range line, ideal for larger batches and open and crush #10 cans at a rate of up to 800 cans per hour

TECHNICAL DATA

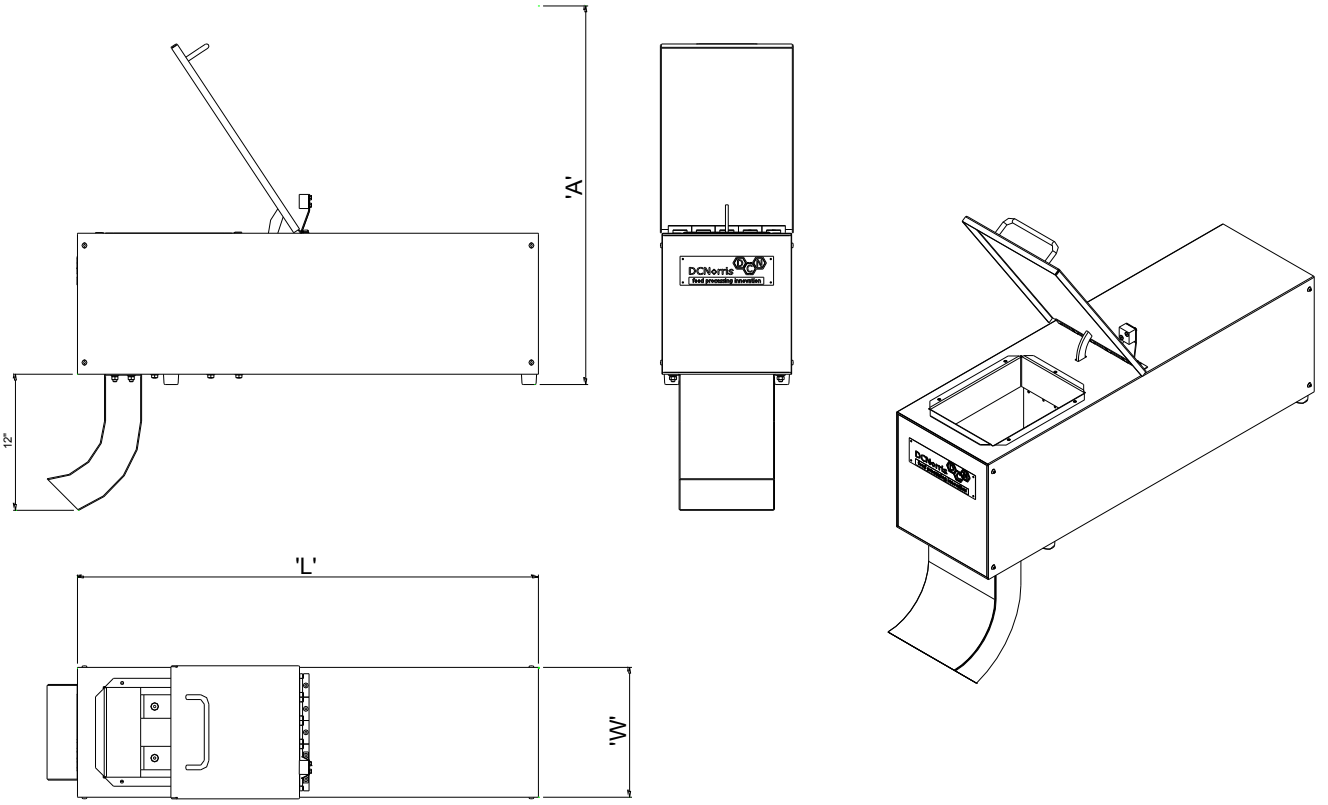

	Pressure	Size
Compressed Air	85cfm @ 90 psi	½" BSP

'A'	'W'	'L'
32.6"	10.9"	38.8"

D C Norris North America LLC

2375 Traversefield Drive
Traverse City
MICHIGAN
49686
USA

t: (+1) 231. 935. 1519
e: mail@dcnorrisna.com
w: www.dcnorrisna.com

DC NORRIS
NORTH AMERICA